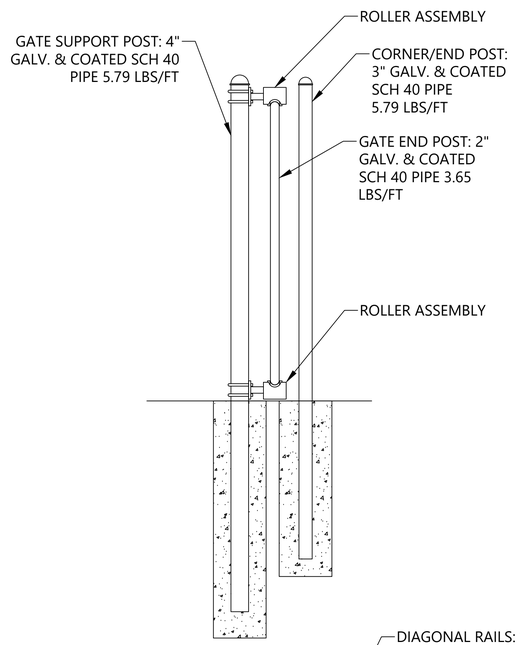

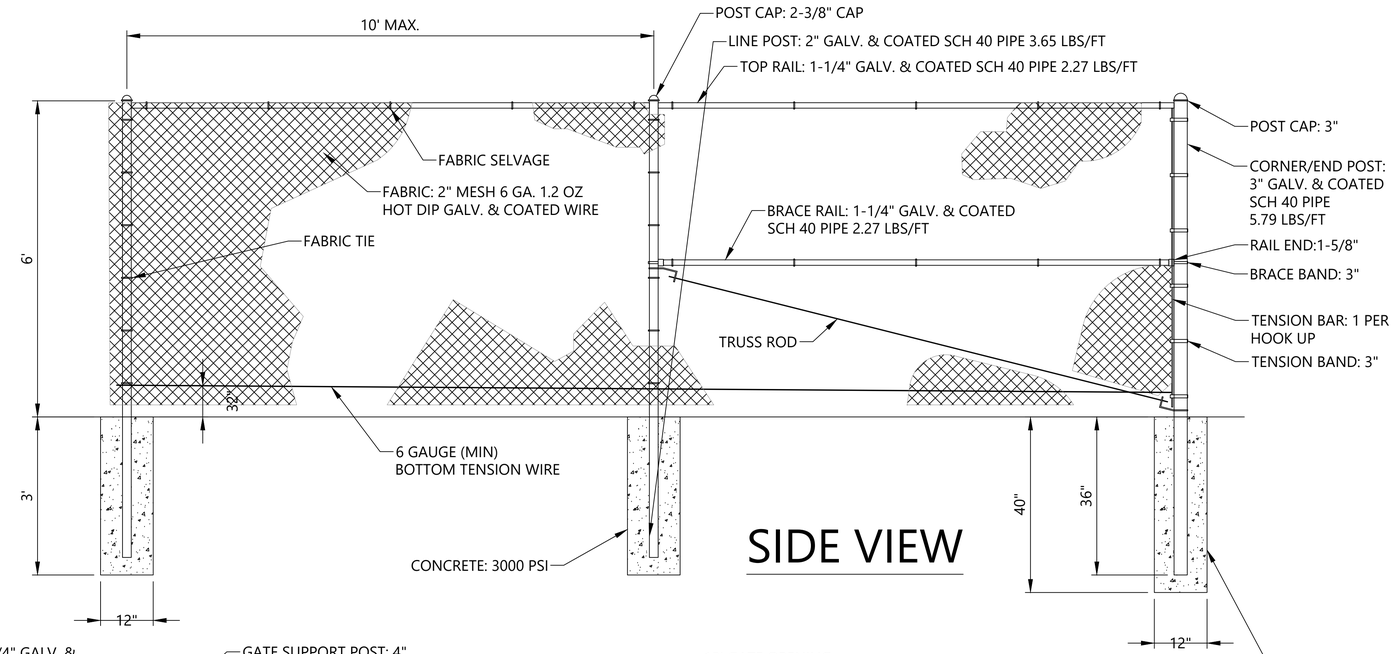

SIDE VIEW

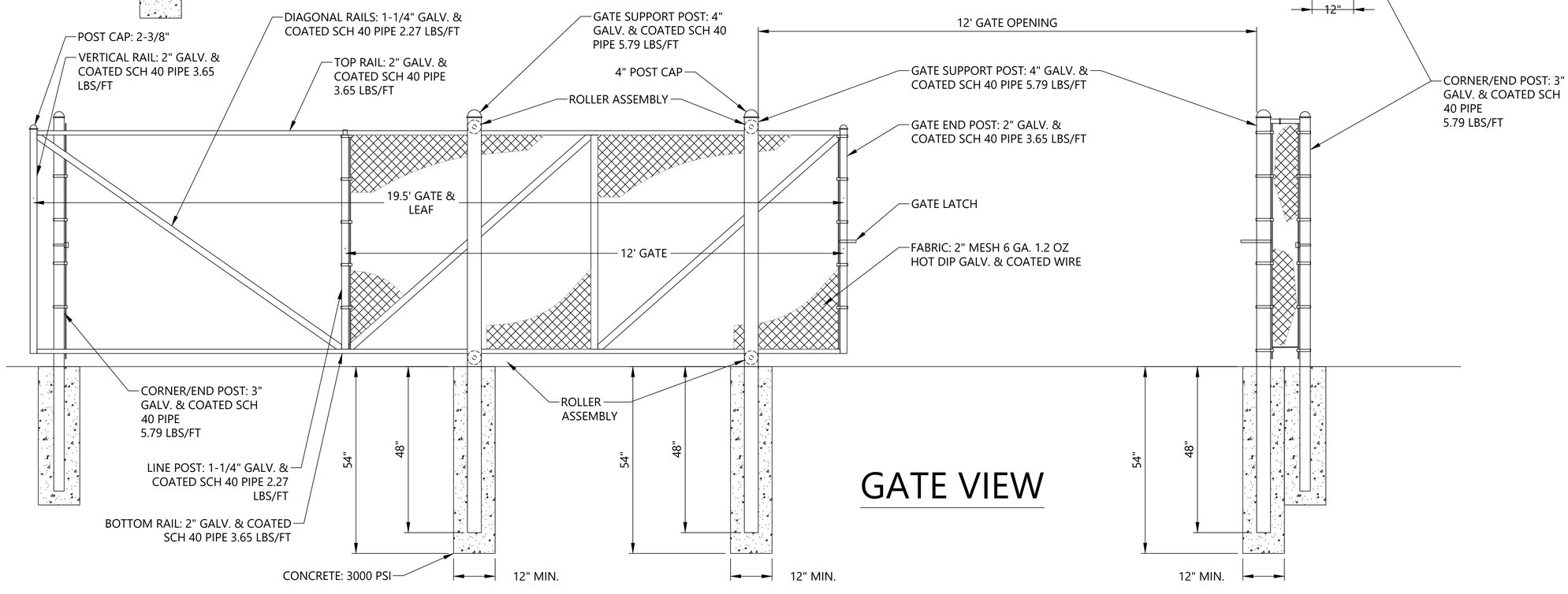

GATE VIEW

NOT TO SCALE

March 20, 2024 7:51 AM S:\Utilities\ENGINEERING\ACAD\LCU-CAD-Stnds\151209 LCU STD DETAILS\CAD FILES\LS-02.dwg

Lee County Southwest Florida

LEE COUNTY UTILITIES ENGINEERING
1500 MONROE STREET
FORT MYERS, FLORIDA 33901

TITLE	LIFT STATION FENCING DETAIL
REVISION: 3/20/24	DETAIL NO.: LS-02.dwg